Fluid-o-Tech high volume rotary vane pumps

The high volume rotary vane pumps manufactured by Fluid-o-Tech and sold worldwide under the trademark Rotoflow are available in six flow ratings to meet the needs of high volume pumping.

Technical features and manufacturing characteristics

The rotary vane pump with brass or stainless steel body utilizes a stainless steel AISI 303 rotor, while the pumping chamber and the vanes are in graphitic carbon.
Inlet and outlet ports are 1/2" NPT/GAS female threaded and the pump is equipped with a built-in adjustable by-pass valve.
The pump can be connected to coupling direct motor with a metallic clamp or to M71 and M80 UNELMEC frame motors with the Fluid-o-Tech coupling and adapter set.

Maximum operative temperature: 70 °C (158 °F)

Available upon request:
- Viton/EPDM seals (suffix - V/E)
- NSF listed pumps for potable water. In this case the prefix for each model is PA instead of PO

Main applications

- Post-mix drink dispensers
- Cooling and booster systems
- Fuel injection systems
- Reverse osmosis
- Ultra-filtration

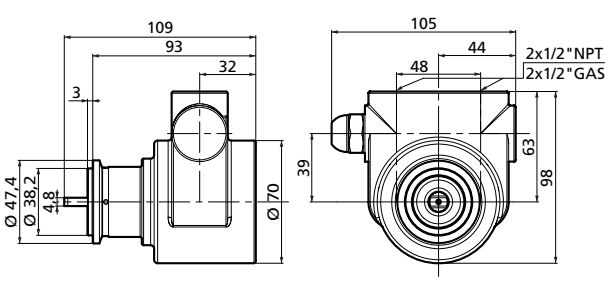

Dimensions in mm

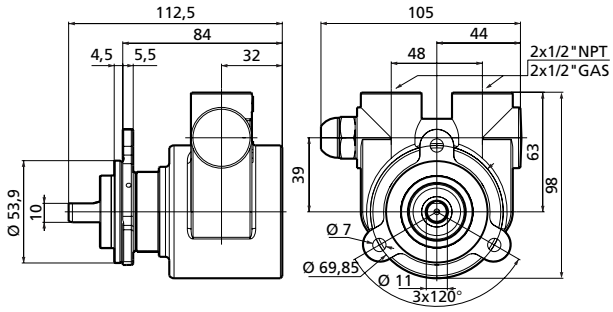

Dimensions in mm

Fluid-o-Tech high volume rotary vane pumps

MODEL PO/PA Brass	500	501	500F	501F	600	601	600F	601F	700	701	700F	701F	800	801	800F	801F	900	901	900F	901F	1000	1001	1000F	1001F
MODEL PO/PA Stainless steel	**510**	**511**	**510F**	**511F**	**610**	**611**	**610F**	**611F**	**710**	**711**	**710F**	**711F**	**810**	**811**	**810F**	**811F**	**910**	**911**	**910F**	**911F**	**1010**	**1011**	**1010F**	**1011F**
l/h at 2 bar		540				640				740				840				940				1040		
l/h at 7 bar		520				620				720				820				920				1020		
l/h at 14 bar		497				597				697				797				897				997		
Figure		L-L				M-M				N-N				P-P				R-R				S-S		
By-Pass valve	NO	YES	NO	YES	NO	YES	NO	YES	NO	YES	NO	YES	NO	YES	NO	YES	NO	YES	NO	YES	NO	YES	NO	YES
Flange mount	NO	NO	YES	YES	NO	NO	YES	YES	NO	NO	YES	YES	NO	NO	YES	YES	NO	NO	YES	YES	NO	NO	YES	YES
Clamp mount	YES	YES	NO	NO	YES	YES	NO	NO	YES	YES	NO	NO	YES	YES	NO	NO	YES	YES	NO	NO	YES	YES	NO	NO

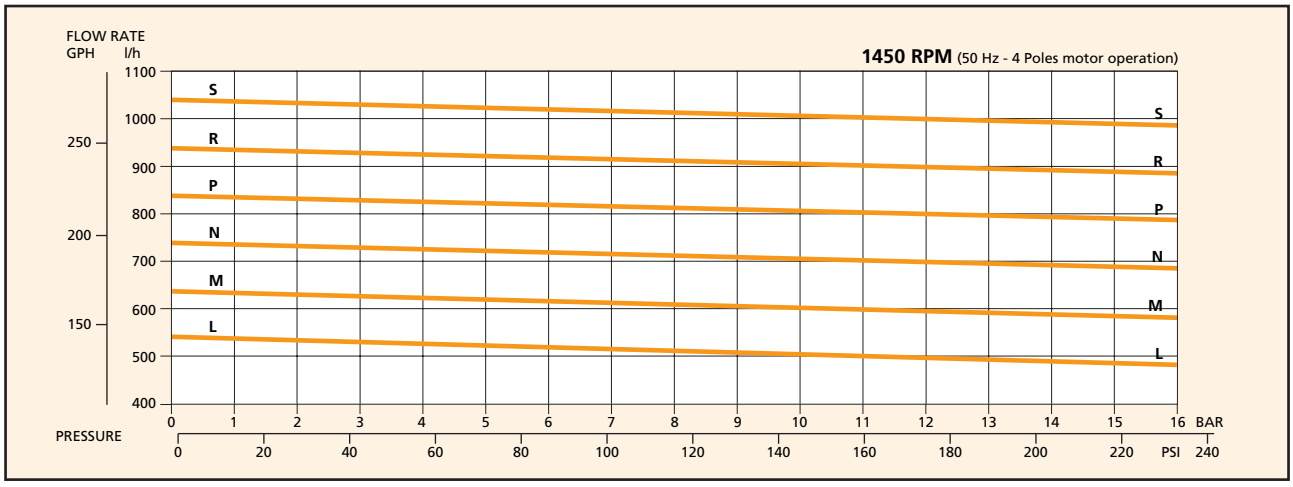

MODEL PO/PA Brass	500	501	500F	501F	600	601	600F	601F	700	701	700F	701F	800	801	800F	801F	900	901	900F	901F	1000	1001	1000F	1001F
MODEL PO/PA Stainless steel	**510**	**511**	**510F**	**511F**	**610**	**611**	**610F**	**611F**	**710**	**711**	**710F**	**711F**	**810**	**811**	**810F**	**811F**	**910**	**911**	**910F**	**911F**	**1010**	**1011**	**1010F**	**1011F**
GPH at 20 psi		170				201				232				264				295				327		
GPH at 100 psi		165				196				227				259				290				322		
GPH at 200 psi		159				190				221				253				284				316		
Figure		L'-L'				M'-M'				N'-N'				P'-P'				R'-R'				S'-S'		
By-Pass valve	NO	YES	NO	YES	NO	YES	NO	YES	NO	YES	NO	YES	NO	YES	NO	YES	NO	YES	NO	YES	NO	YES	NO	YES
Flange mount	NO	NO	YES	YES	NO	NO	YES	YES	NO	NO	YES	YES	NO	NO	YES	YES	NO	NO	YES	YES	NO	NO	YES	YES
Clamp mount	YES	YES	NO	NO	YES	YES	NO	NO	YES	YES	NO	NO	YES	YES	NO	NO	YES	YES	NO	NO	YES	YES	NO	NO

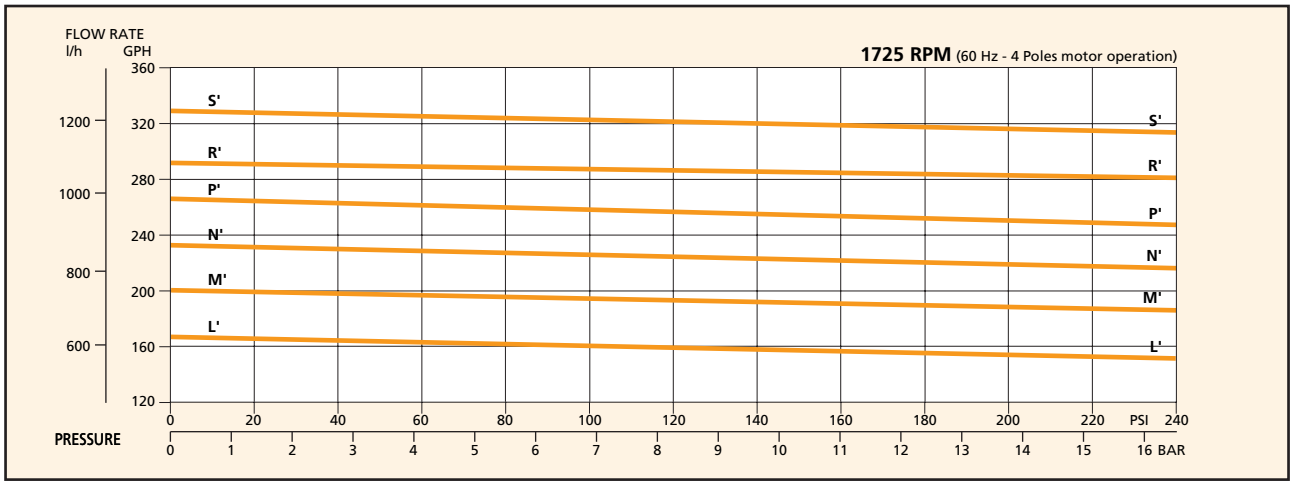

Characteristics at constant motor speed, with water at 68 °F and by-pass blocked - Figures of flow are averages - Pump weight: 1,9 kg (4,2 Lbs) clamp mount and 2 kg (4,4 Lbs) flange mount

For applications involving other fluids, high temperatures or unusual processing conditions, please consult the factory or an authorized Fluid-o-Tech distributor

PO – HV – 07/06 Ed.

Fluid-o-Tech srl
Via Morimondo, 23
20143 Milano - Italy
Tel. +39 (02) 8917071
Fax +39 (02) 89170799

Fluid-o-Tech Int'l Inc.
161 Atwater St.,
Plantsville CT (USA) 06479
Tel. +1 (860) 276-9270
Fax +1 (860) 620-0193

Fluid-o-Tech Int'l Inc. Japan
203, 2-17-19, Ebara, Shinagawa
Tokyo 142-0063, Japan
Tel. +81 (0) (3) 3783-9660
Fax +81 (0) (3) 3783-9661

Fluid-o-Tech China
Jingwei Industrial Zone,
Beifang Huairou, Beijing, 101400, PRC
Tel. +86 (0) (10) 61684650
Fax +86 (0) (10) 61684651